TOTO

PUBLIC

TYC602P

High Speed Hand Dryer
w/ Paper Dispenser & Waste Bin
(Wall Embedded Type)

Features

- The hand dryer provides a fast and hygienic solution for drying hands in public restrooms. With efficient airflow and automatic operation, it enhances cleanliness while reducing paper waste.

Specifications

Size:	350W x 185D x 1680H mm
Power Consumption:	Heater On : 605 ~ 675W Heater Off : 380 ~ 440W AC220 ~ 240V
Drying Time:	5 ~ 9 sec
Weight:	22kg
Noise Level:	59dB
Drain Tank:	0.95L
Material:	SUS

Parts description

- **TYC602P**
  High Speed Hand Dryer w/ Paper Dispenser & Waste Bin (Wall Embedded Type)

Colors

Metallic Silver

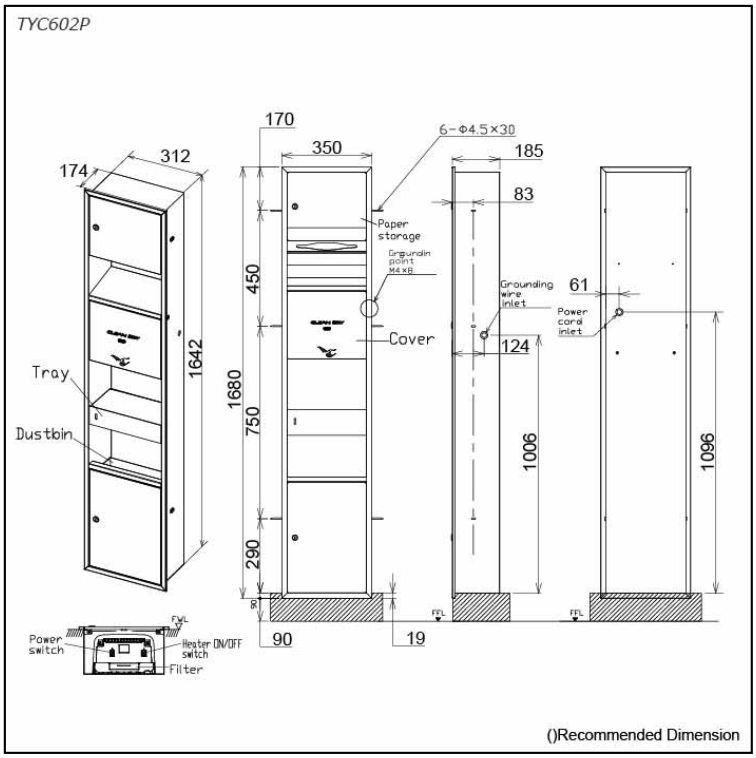

Please consult a TOTO representative for more details

All rights reserved by TOTO company. Specifications and sizes are subject to change without notice.