TOTO

FAUCETS

TX303BMBR

MONO
Bidet Faucet

Features

- With its harmonious combination of concentric and linear forms, the Mono series will add a sleek touch to your bathroom.
- TOTO's ECOCAP Technology: More Jet, Less Water.

Specifications

Finish:	Nickel Chrome
Hole:	1 hole
Water Pressure:	0.05MPa~0.75MPa

Parts description

- **TX303BMBR**
  Bidet Faucet w/ pop-up waste

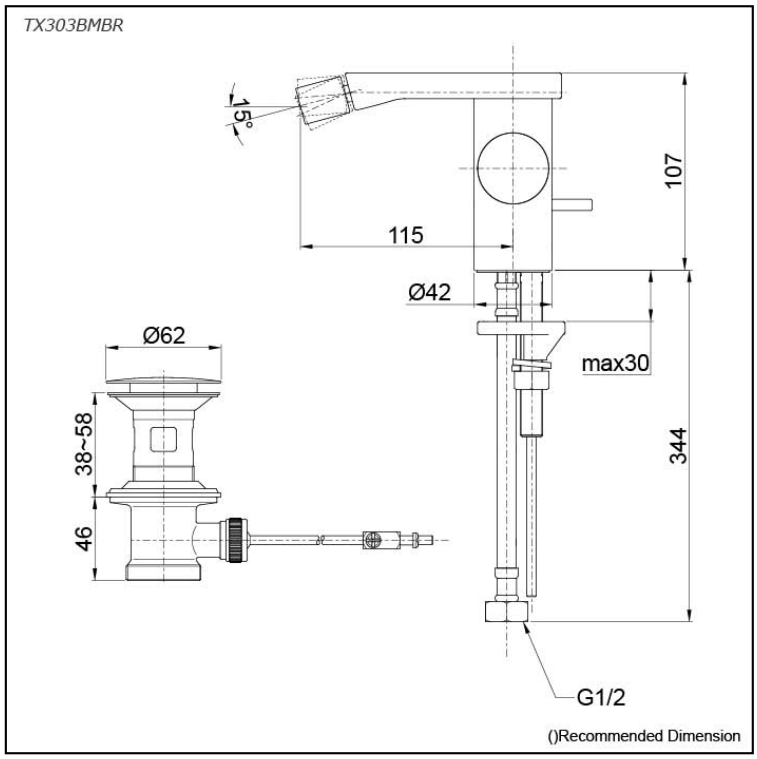

Please consult a TOTO representative for more details

All rights reserved by TOTO company. Specifications and sizes are subject to change without notice.