TOTO

FAUCETS

TLP02309B

ZL Series
Wall-Mount Single Lever Lavatory Faucet
(Short Spout) (w/o Pop-up Waste)

Features

- Ultra-thin edges and a luminous, mirror surface create a delicate contrast, showcasing advanced design. Engineered to complement sharp-edged basins, these faucets bring a modern, sophisticated edge to your bathroom.
- Long-lasting Comfort: COMFORT GLIDE for Smooth Operation with TOTO's Original Cartridge.

Specifications

Material:	Stainless Steel
Water Pressure:	0.05MPa~1.0MPa

Parts description

- **TLP02309B**
  Wall-Mount Single Lever Lavatory Faucet (Short Spout) (w/o Waste Fittings)

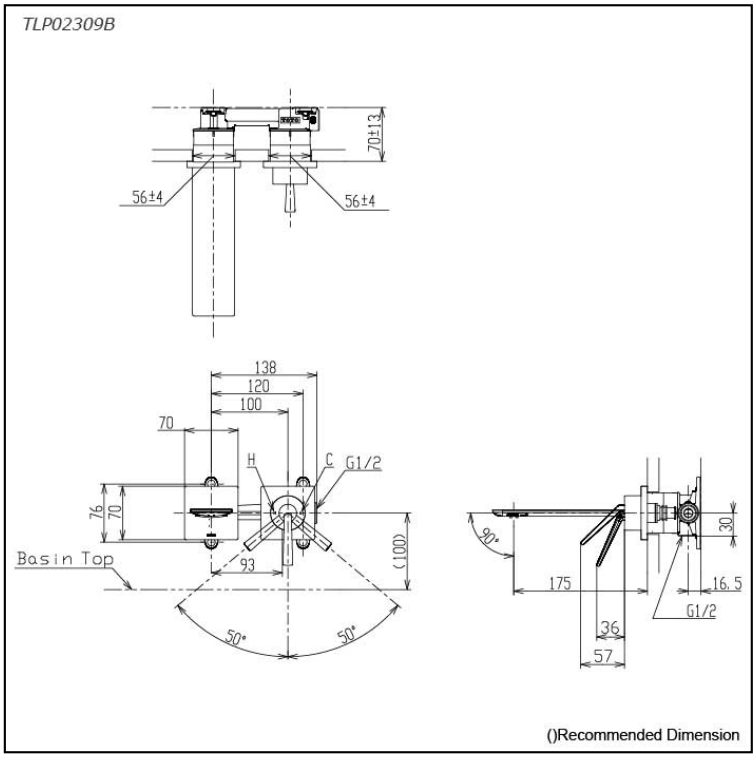

Please consult a TOTO representative for more details

All rights reserved by TOTO company. Specifications and sizes are subject to change without notice.

FAUCETS

Flow Rate

TLP02309B

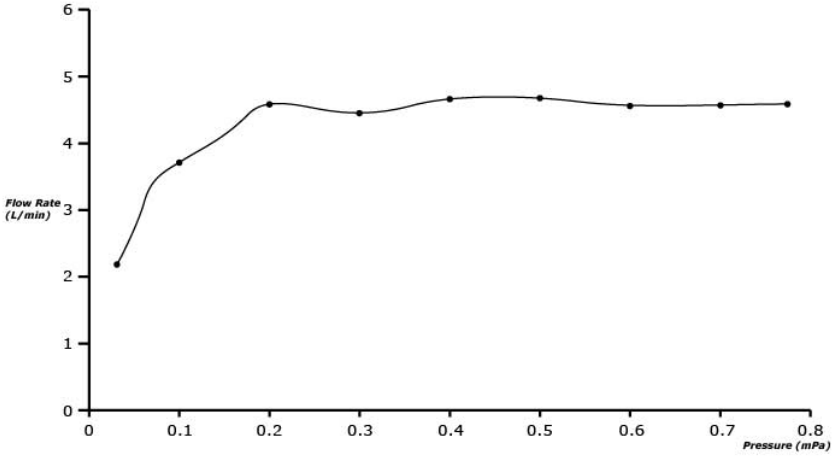

Please consult a TOTO representative for more details

All rights reserved by TOTO company. Specifications and sizes are subject to change without notice.