TOTO

FAUCETS

TLG11307BA

GF Series
Wall-Mount Single Lever Lavatory Faucet
(Short Spout) (w/o Pop-up Waste)

Features

- Versatile elegance, crafted with precision. Modern classic collection balances minimalist design with fine, rounded details, creating unique personality. Long handle emphasizes slimness and stability, making it seamless to any aesthetic.
- Long-lasting Comfort: COMFORT GLIDE for Smooth Operation with TOTO's Original Cartridge.

Specifications

Material:	Brass
Water Pressure:	0.05MPa~1.0MPa

Parts description

- **TLG11307BA**
  Wall Mount Single Lever Lavatory Faucet (Short Spout) (w/o Waste Fittings)

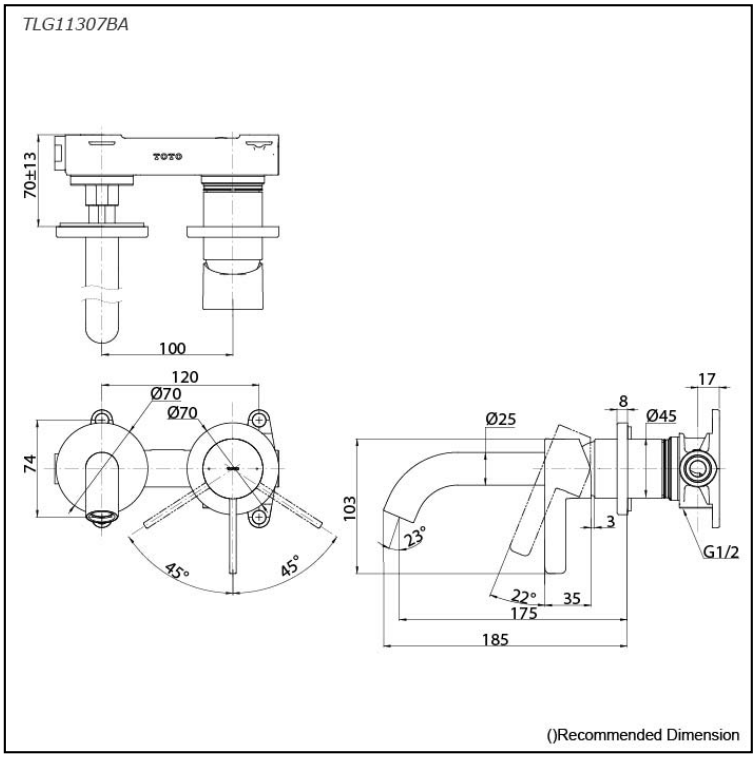

Please consult a TOTO representative for more details

All rights reserved by TOTO company. Specifications and sizes are subject to change without notice.

FAUCETS

Flow Rate

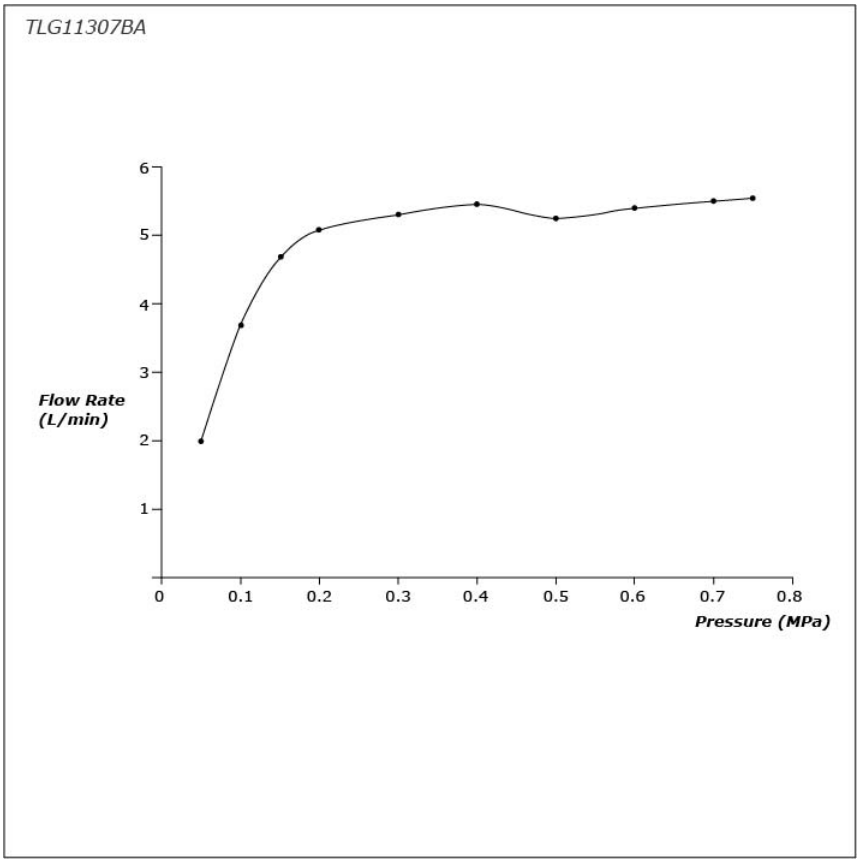

All rights reserved by TOTO company. Specifications and sizes are subject to change without notice.