TOTO

FAUCETS

TLG02307B

GR Series
Single Lever Lavatory Faucet
(Tall Vessel) (w/ Pop-up Waste)

Features

- Make a regal statement in your space. This premium faucet series, blending sharp edges and gentle curves, offers striking sculptural beauty. Its strong lines, designed to create stability and make a statement, exude a regal presence.
- Long-lasting Comfort: COMFORT GLIDE for Smooth Operation with TOTO's Original Cartridge.

Specifications

Material:	Brass
Water Pressure:	0.05MPa~1.0MPa

Parts description

- **TLG02307B**
  Single Lever Lavatory Faucet (Tall Vessel) (w/ Pop-up Waste)

reddot award 2017 winner

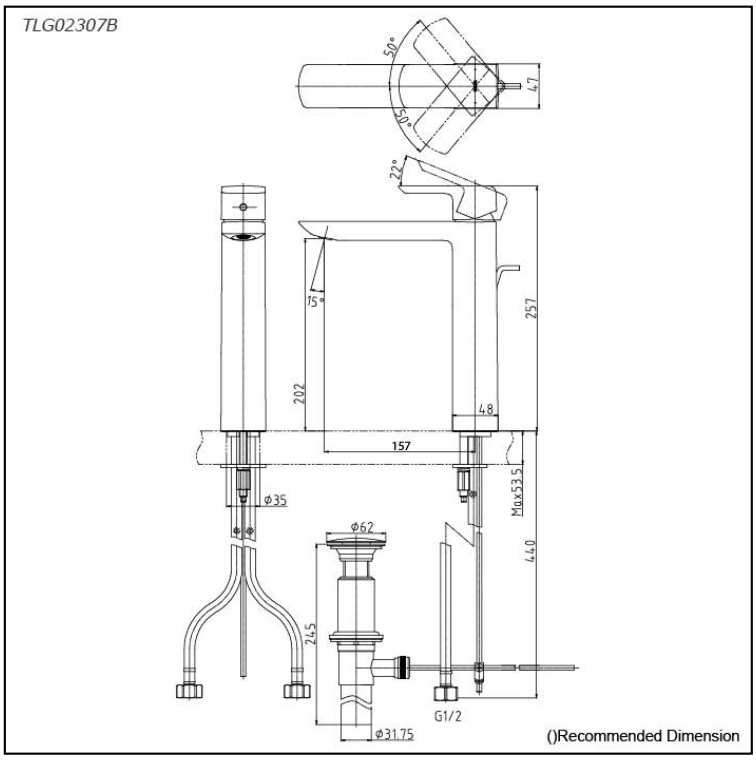

Please consult a TOTO representative for more details

All rights reserved by TOTO company. Specifications and sizes are subject to change without notice.

FAUCETS

Flow Rate

TLG02307B

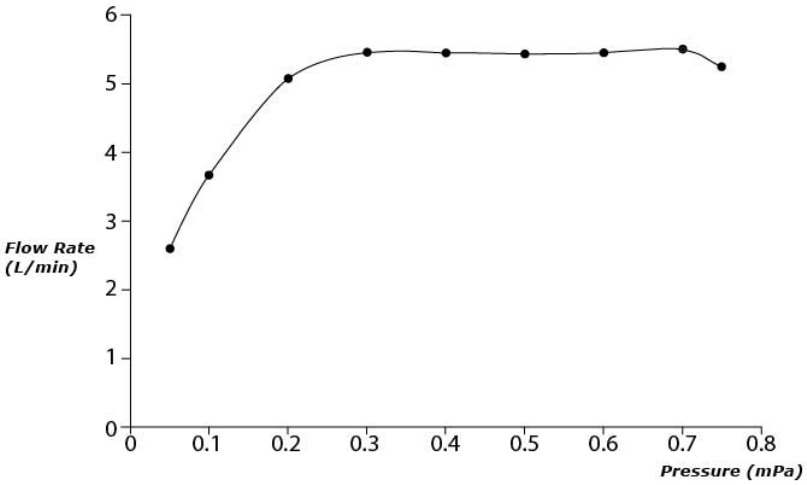

All rights reserved by TOTO company. Specifications and sizes are subject to change without notice.