TOTO

BATHTUBS

PJY1604-4HPWE#MW

GALALATO
Freestanding Bathtub

Features

- Lavatories crafted from Reinforced Marble feature a marble-like appearance with two finish options: glossy or matte. Built for durability, they are resistant to harsh chemicals and provide excellent heat resistance, combining elegance with lasting strength.

Specifications

Size:	1650W x 1650D x 625H mm
Material:	Reinforced Marble
Actual Capacity:	450L
Pop-up Waste:	Included

Parts description

Fittings is **not included.**

- **PJY1604-4HPWE#MW**
  Freestanding Bathtub (w/ Hand Grip)

Colors

Matte White (#MW)

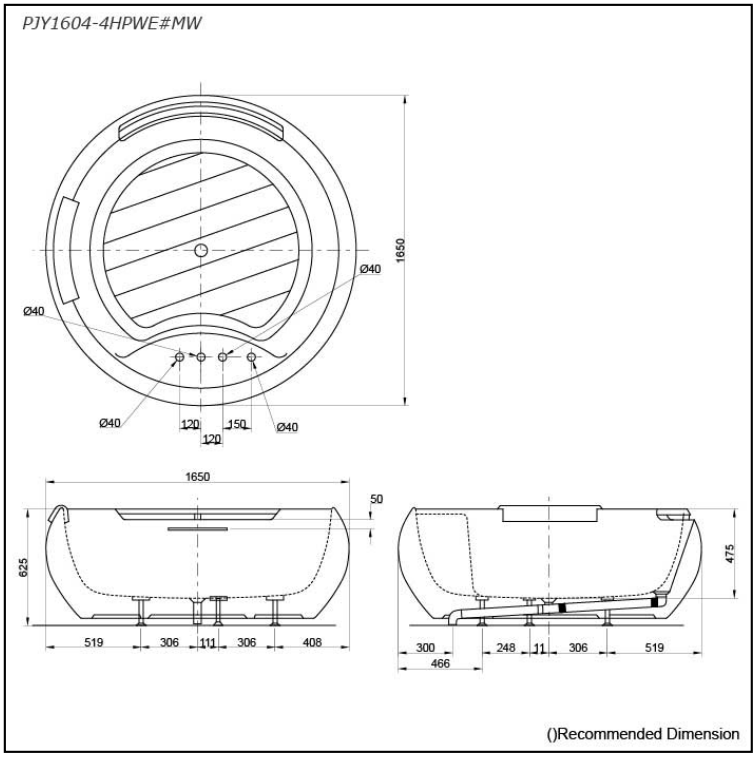

Please consult a TOTO representative for more details

All rights reserved by TOTO company. Specifications and sizes are subject to change without notice.