TOTO

LAVATORIES

PJS04WE#MGB

REINFORCED MARBLE
Console Lavatory

Features

- Experience the perfect combination of style and function. With a spacious basin and sleek design, this option offers durability and everyday convenience, making it an elegant and practical choice for any bathroom.
- Lavatories crafted from Reinforced Marble feature a marble-like appearance with two finish options: glossy or matte. Built for durability, they are resistant to harsh chemicals and provide excellent heat resistance, combining elegance with lasting strength.

Specifications

Size:	450W x 450D x 160H mm
Material:	Reinforced Marble

Parts description

Faucet not included

- **PJS04WE#MGB**
  Console Lavatory
  Obsidian Black

Colors

Obsidian Black

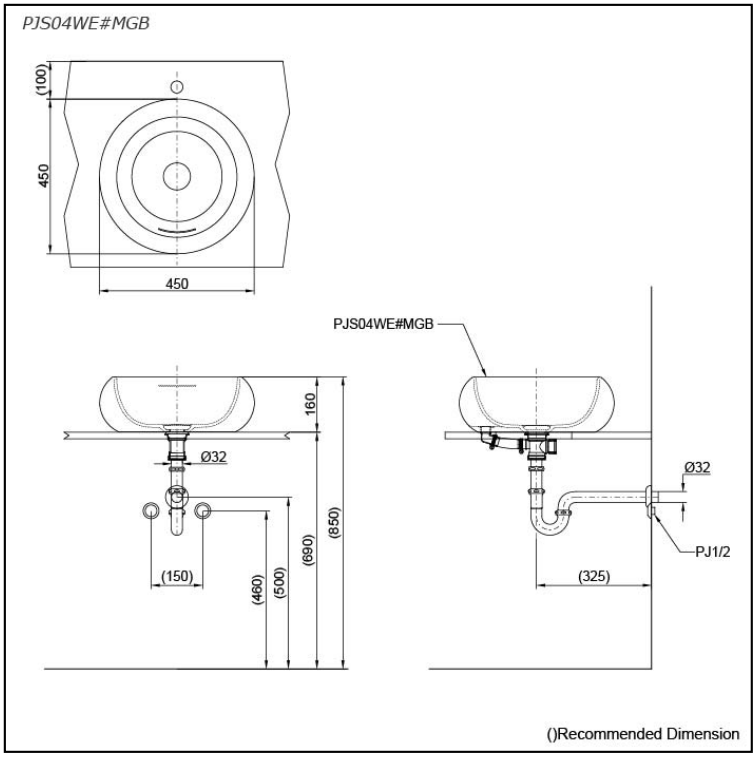

Please consult a TOTO representative for more details

All rights reserved by TOTO company. Specifications and sizes are subject to change without notice.