TOTO

LAVATORIES

LW530J

Self Rimming Lavatory

Features

- Experience the ideal blend of elegance and practicality. With its classic design and easy installation, this self-rimming option provides a seamless look and reliable performance, making it a timeless choice for any bathroom.

Specifications

Size:	450W x 450D x 165H mm
Material:	Ceramic

Parts description

Faucet not included

- **LW530J**
  Self Rimming Lavatory

Colors

White

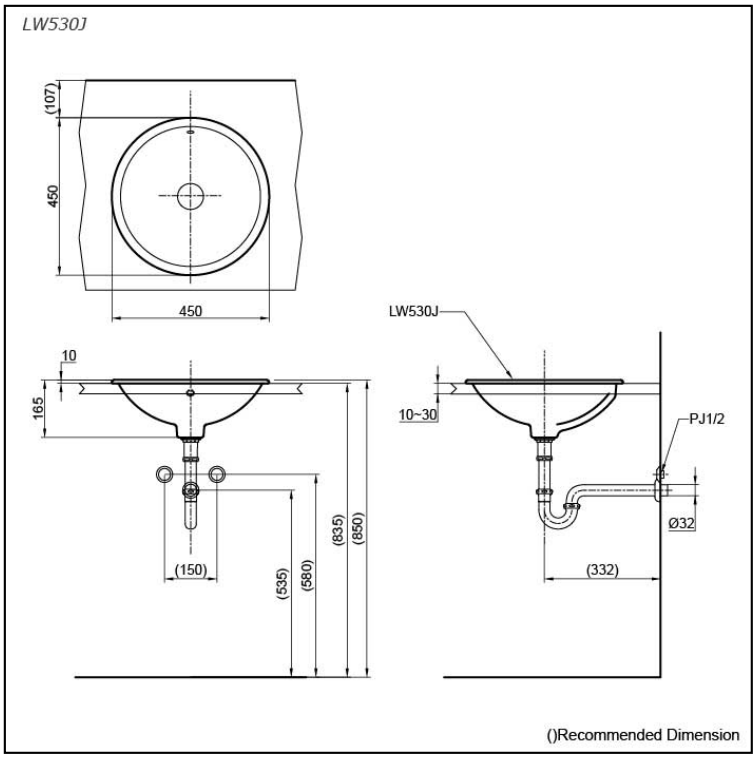

Please consult a TOTO representative for more details

All rights reserved by TOTO company. Specifications and sizes are subject to change without notice.