TOTO

FAUCETS

DM209CF
DM209CF#PG

CLASSIC SERIES
Floor Standing Bath & Shower Set

Features

- The Classic collections are dedicated to the Romantic at heart. They are graceful, sinuous shapes will lend a touch of grandeur to your homes.

Specifications

Finish:	- Chrome - Gold (#PG)
Material:	Bronze
Water Pressure:	0.05MPa~0.75MPa

Parts description

- **DM209CF**
  DM209CF#PG
  Floor Standing Bath and Shower Set

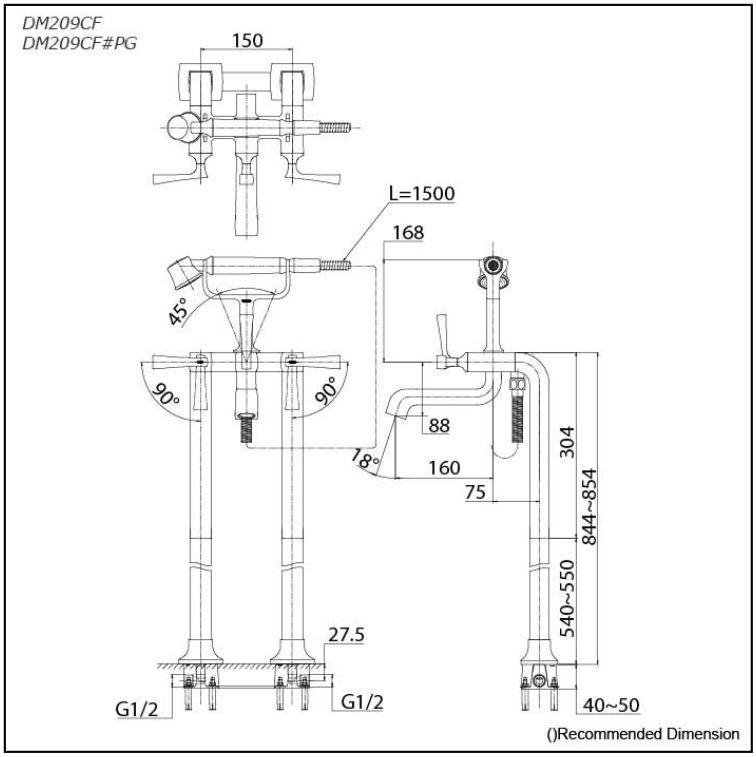

Please consult a TOTO representative for more details

All rights reserved by TOTO company. Specifications and sizes are subject to change without notice.