TOTO

SHOWER FITTINGS

TBG13305S

GT Series
Bath & Shower Set
(3-Holes)

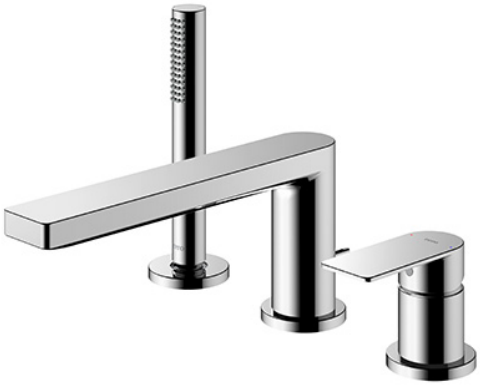

Features

- Curved edges give a sense of softness, allowing for it to be easily matched with a wide range of bathroom fixtures.
- Long-lasting Comfort: COMFORT GLIDE for Smooth Operation with TOTO's Original Cartridge.
- PVD finishes offer beauty and strength, enriching your bathroom with vibrant color.

Specifications

Material:	Brass
Water Pressure:	0.05MPa~1.0MPa

Parts description

- **TBG13305S**
  Bath & Shower Set
  (3-Holes)

Certifications

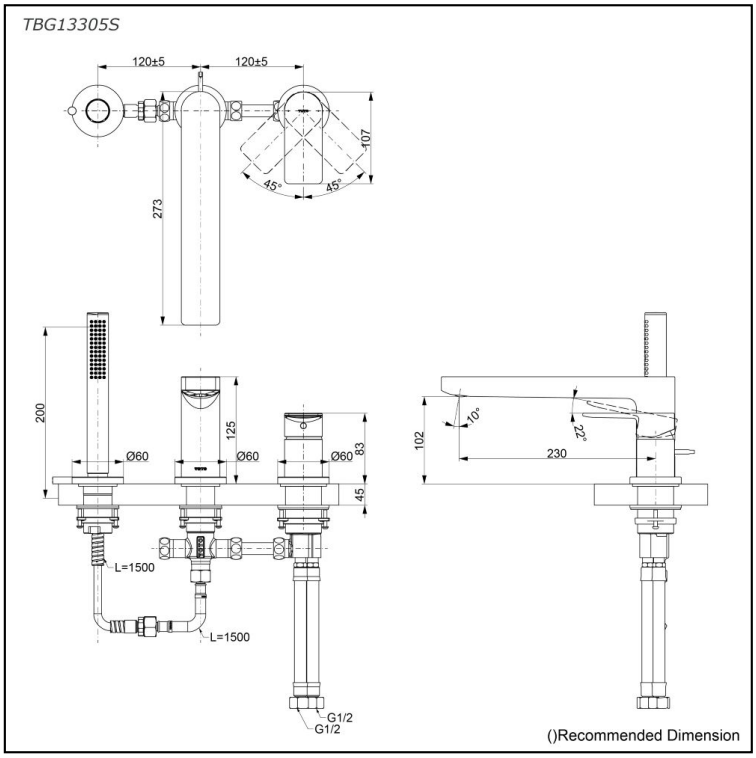

Please consult a TOTO representative for more details

All rights reserved by TOTO company. Specifications and sizes are subject to change without notice.