TOTO

LAVATORIES

Wall Hung Lavatory

LW897CJ
LW897J

Features

- Embrace modern elegance with this wall hung option. Its space-saving design creates an open feel while delivering practicality and style, making it an ideal choice for contemporary bathrooms.

Specifications

Size:	455W x 430D x 180H mm
Material:	Ceramic

Parts description

Faucet not included

- **LW897CJ**
  Wall Hung Lavatory (Single Hole Faucet)
- **LW897JJ**
  Wall Hung Lavatory (For 8 inch Faucet)

Colors

White

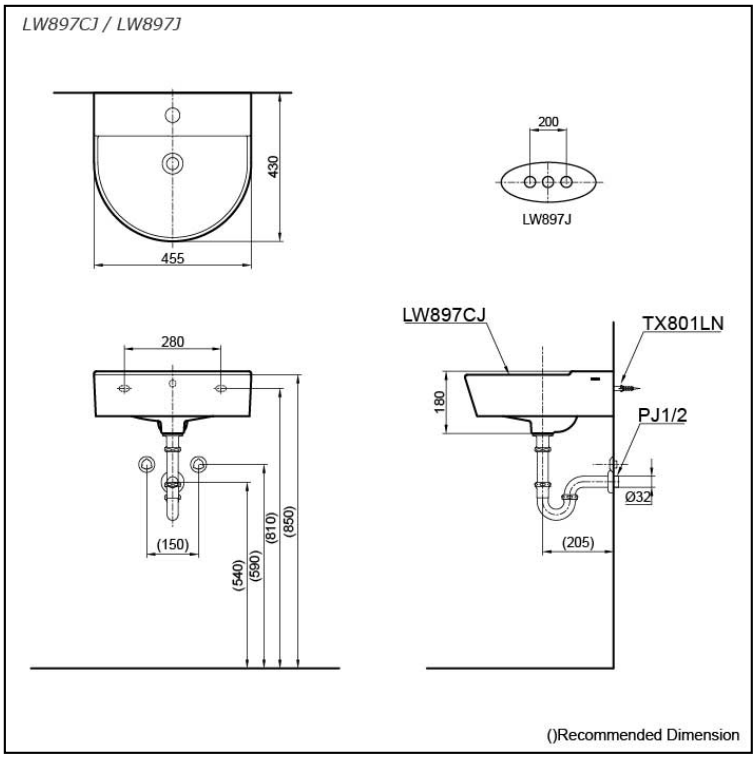

Please consult a TOTO representative for more details

All rights reserved by TOTO company. Specifications and sizes are subject to change without notice.