SHOWER FITTINGS

TBW01401D

G Selection
Thermostat Shower Column w/ Shower Head (Round) and Spout (1 Mode)

Features

- Transform your shower space with our elegant shower columns, combining modern design with functionality for a luxurious and customizable bathing experience.
- Elevate your shower with COMFORT WAVE technology: enjoy larger droplets in a hand shower design, blending stimulation, relaxation, and water-saving benefits.
- Safety and Comfort Combined: Heat-insulating handle with SMA Thermostat Valve.
- Thermostat Controller: Precision in Comfort.

Specifications

Water Pressure:	0.05 Mpa ~ 1.0 Mpa
Finish:	Chrome
Material:	Brass (Body) Plastic (Shower)
Dimension:	Diameter: 220mm
Shape:	Round

Parts description

- **TBW01401D**
  Thermostat Shower Column
  Round Overhead Shower w/ Mixer and Spout) (w/o Hand Shower) (1 mode)

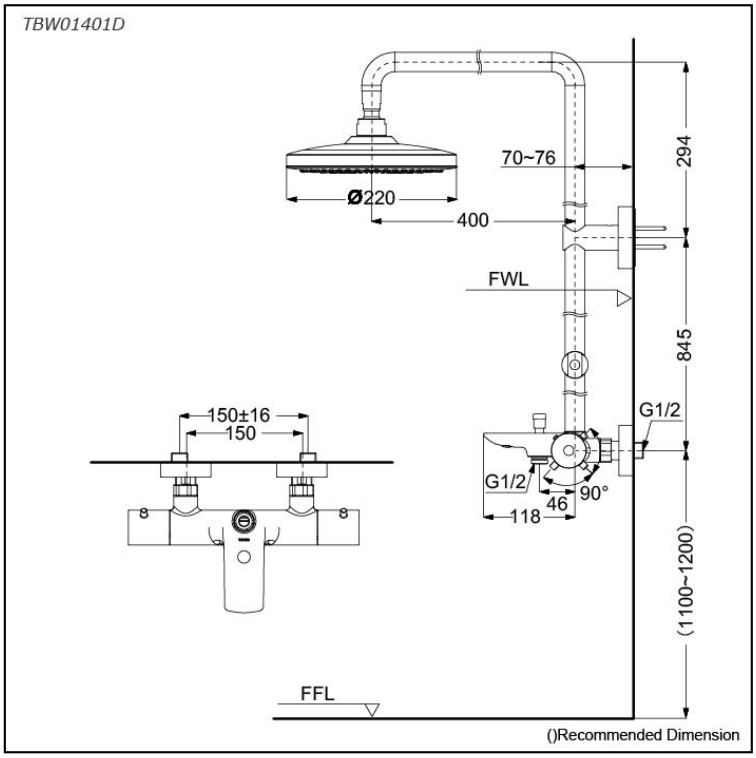

Certifications

Please consult a TOTO representative for more details

All rights reserved by TOTO company. Specifications and sizes are subject to change without notice.