TOTO

FAUCETS

TLG03301B

GS Series
Single Lever Lavatory Faucet
(w/ Pop-up Waste)

Features

- Simple sophistication for everyday living. Soft curves and classic shapes define this design, offering a gentle aesthetic and smart proportions. Back-to-basics inspiration brings a refreshed feel to your daily life.
- Long-lasting Comfort: COMFORT GLIDE for Smooth Operation with TOTO's Original Cartridge.

Specifications

Material:	Brass
Water Pressure:	0.05MPa~1.0MPa

Parts description

- **TLG03301B**
  Single Lever Lavatory Faucet (w/ Pop-up Waste)

reddot award 2018 winner

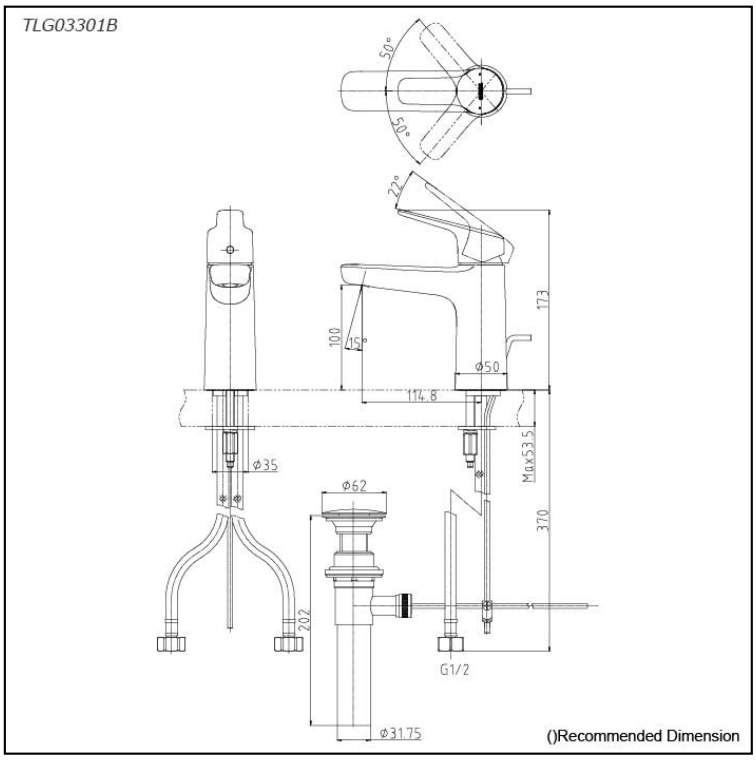

Please consult a TOTO representative for more details

All rights reserved by TOTO company. Specifications and sizes are subject to change without notice.

FAUCETS

Flow Rate

TLG03301B

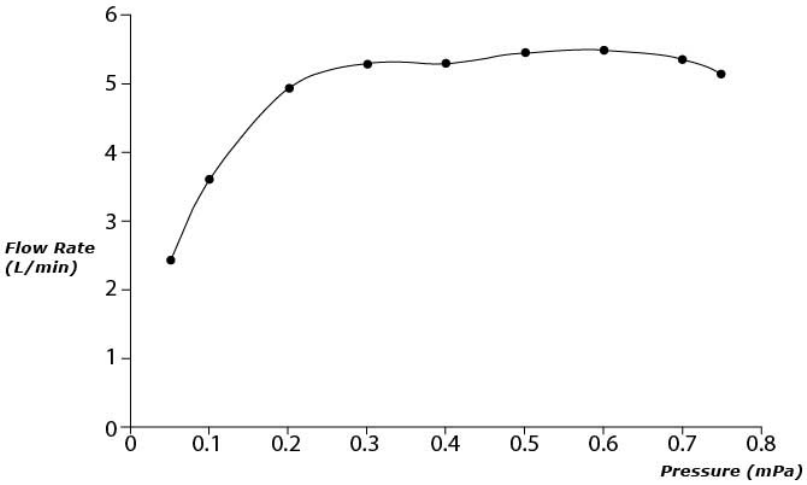

Please consult a TOTO representative for more details

All rights reserved by TOTO company. Specifications and sizes are subject to change without notice.