TOTO

LAVATORIES

LW523NJ

Console Lavatory

Features

- Experience the perfect combination of style and function. With a spacious basin and sleek design, this option offers durability and everyday convenience, making it an elegant and practical choice for any bathroom.

Specifications

Size:	430W x 430D x 160H mm
Material:	Ceramic

Parts description

Faucet not included

- **LW523NJ**
  Console Lavatory
- **TX809L**
  Brackets

Colors

White

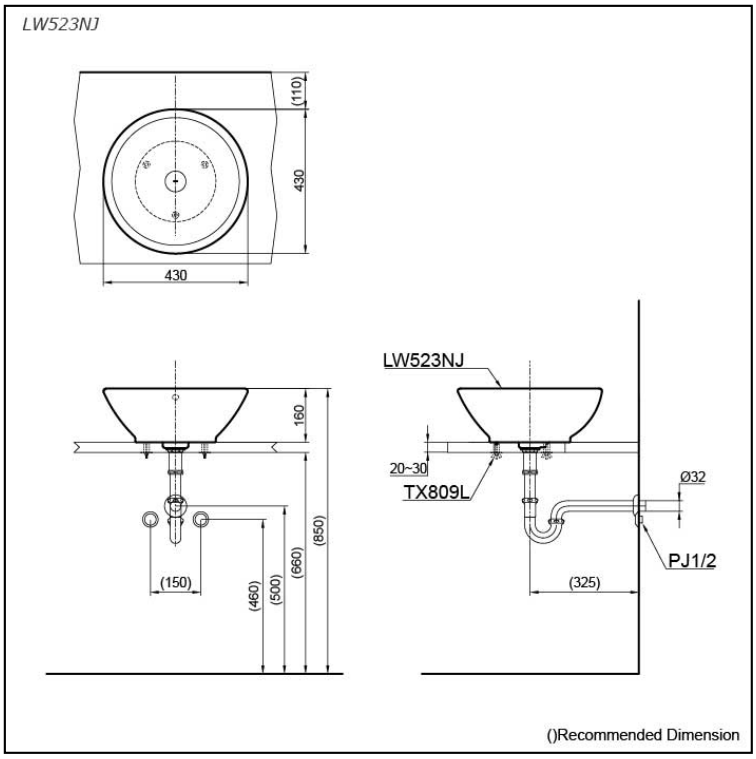

Please consult a TOTO representative for more details

All rights reserved by TOTO company. Specifications and sizes are subject to change without notice.