TOTO

FAUCETS

TX116LKBR

COCKTAIL
Single Lever Lavatory Faucet (Semi-tall)
(w/ pop-up waste)

Features

- The Cocktail series proves that simplicity is the ultimate sophistication. Its ergonomic design and minimalist surface speak of understated luxury.

Specifications

Finish:	Nickel Chrome
Hole:	1 hole
Water Pressure:	0.05MPa~0.75MPa

Parts description

- **TX116LKBR**
  Single Lever Lavatory Faucet with Pop-Up Waste

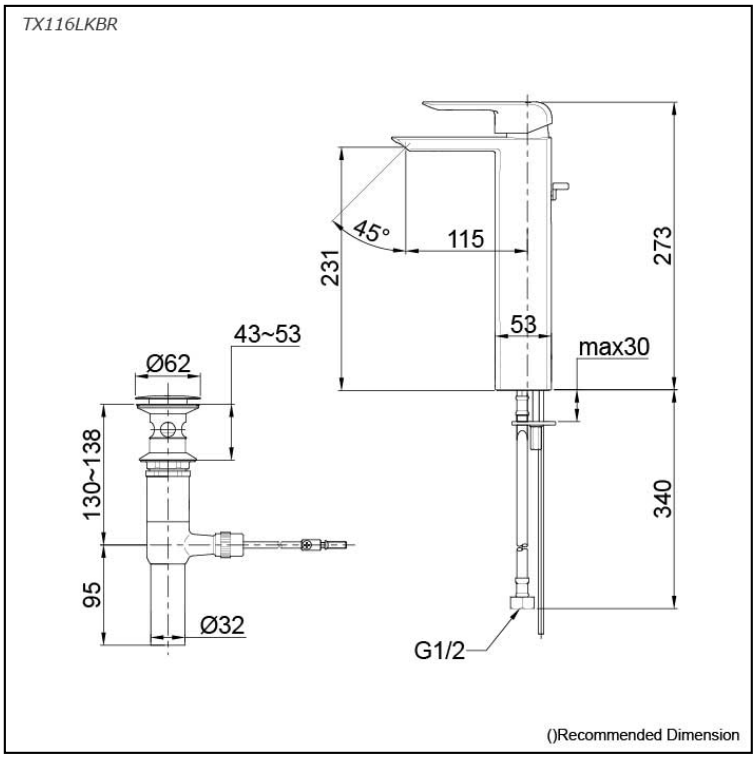

Please consult a TOTO representative for more details

All rights reserved by TOTO company. Specifications and sizes are subject to change without notice.