TOTO

SHOWER FITTINGS

TBG07305BB

GE Series
Bath & Shower Set
(3-Holes)

Features

- GE's series redefines modern design. A V-shaped edge generates captivating multi-sided reflections, complemented by sleek, refined edges. The five-sided mirror reflection adds a contemporary touch, offering a unique visual experience.
- Elevate your shower with COMFORT WAVE technology: enjoy larger droplets in a hand shower design, blending stimulation, relaxation, and water-saving benefits.
- Long-lasting Comfort: COMFORT GLIDE for Smooth Operation with TOTO's Original Cartridge.

Specifications

Material:	Brass
Water Pressure:	0.05MPa~1.0MPa

Parts description

- **TBG07305BB**
  Bath & Shower Set
  (3-Holes)

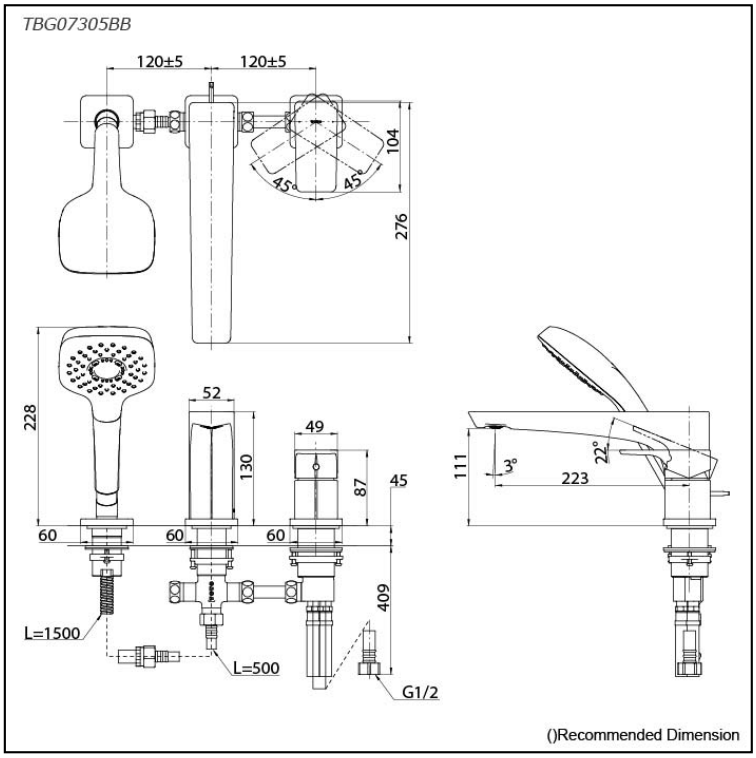

Please consult a TOTO representative for more details

All rights reserved by TOTO company. Specifications and sizes are subject to change without notice.

Flow Rate

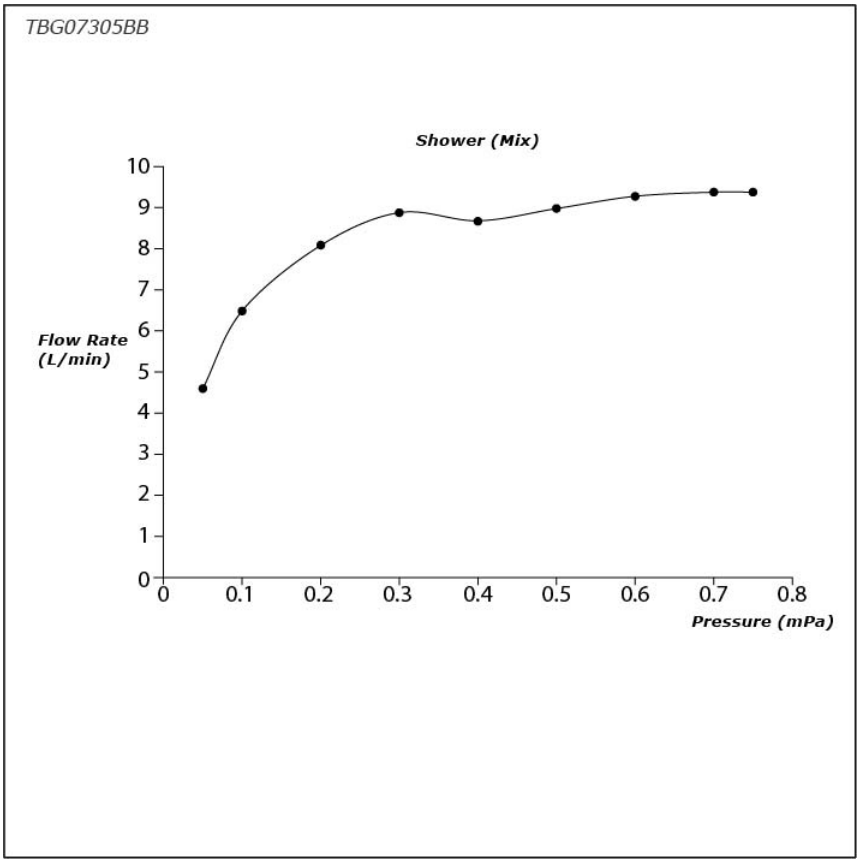

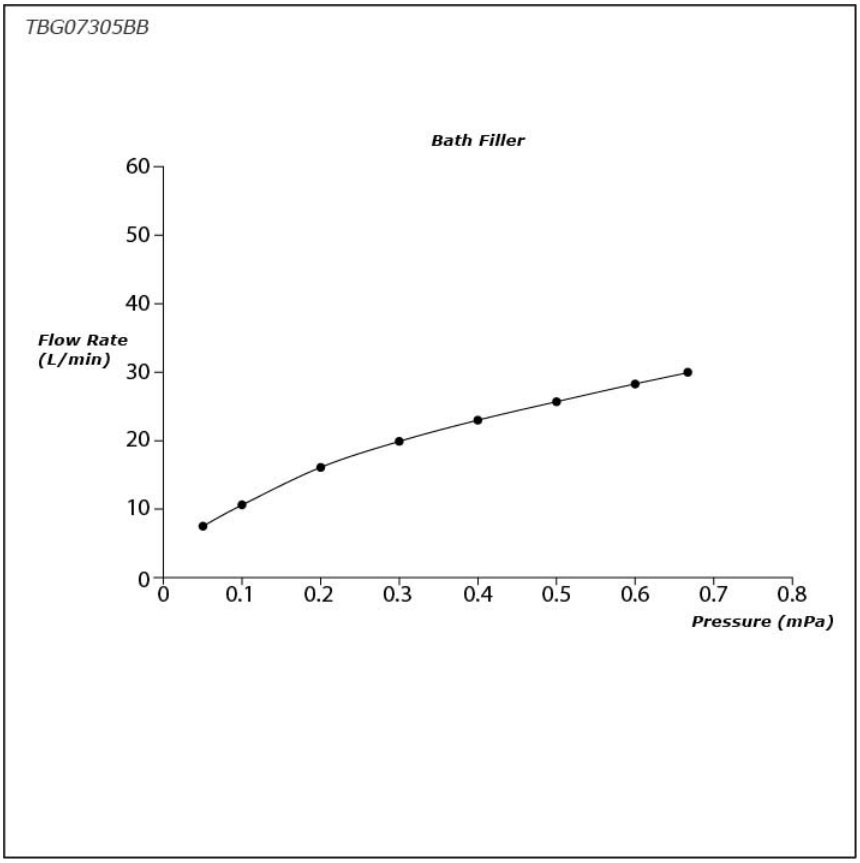

All rights reserved by TOTO company. Specifications and sizes are subject to change without notice.