TOTO

SHOWER FITTINGS

TBG01305BB

GO Series
Bath & Shower Set
(3-Holes)

Features

- Infuse your space with a soft, natural ambiance. This faucet series, featuring sunlight-inspired curves, brings sculptural elegance. The round faucet body, blended with nature-like curves, enhances form and function.
- Elevate your shower with COMFORT WAVE technology: enjoy larger droplets in a hand shower design, blending stimulation, relaxation, and water-saving benefits.
- Long-lasting Comfort: COMFORT GLIDE for Smooth Operation with TOTO's Original Cartridge.

Specifications

Material:	Brass (Faucet) Plastic (Hand Shower)

Parts description

- **TBG01305BB**
  Bath & Shower Set (3-Holes)

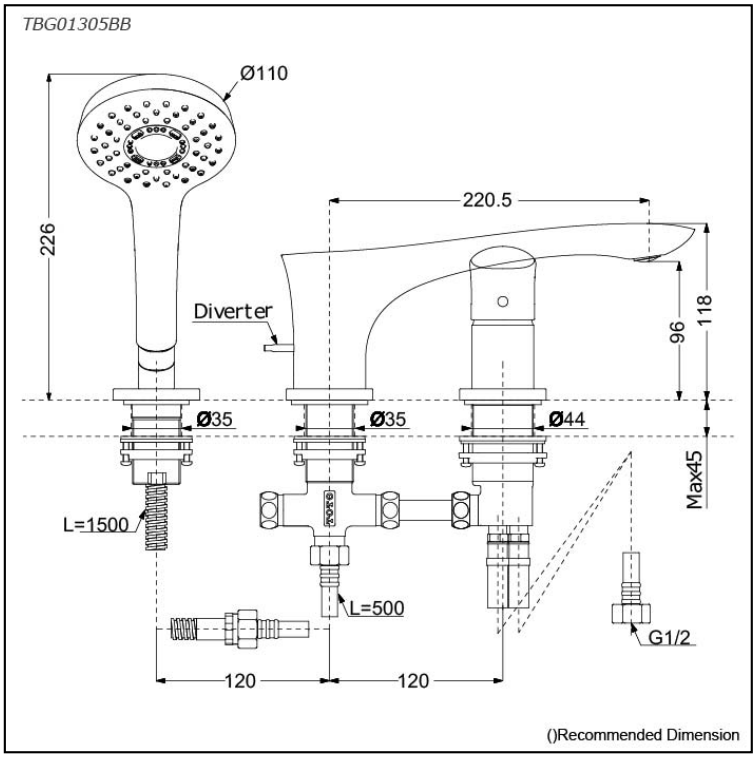

Please consult a TOTO representative for more details

All rights reserved by TOTO company. Specifications and sizes are subject to change without notice.

Flow Rate

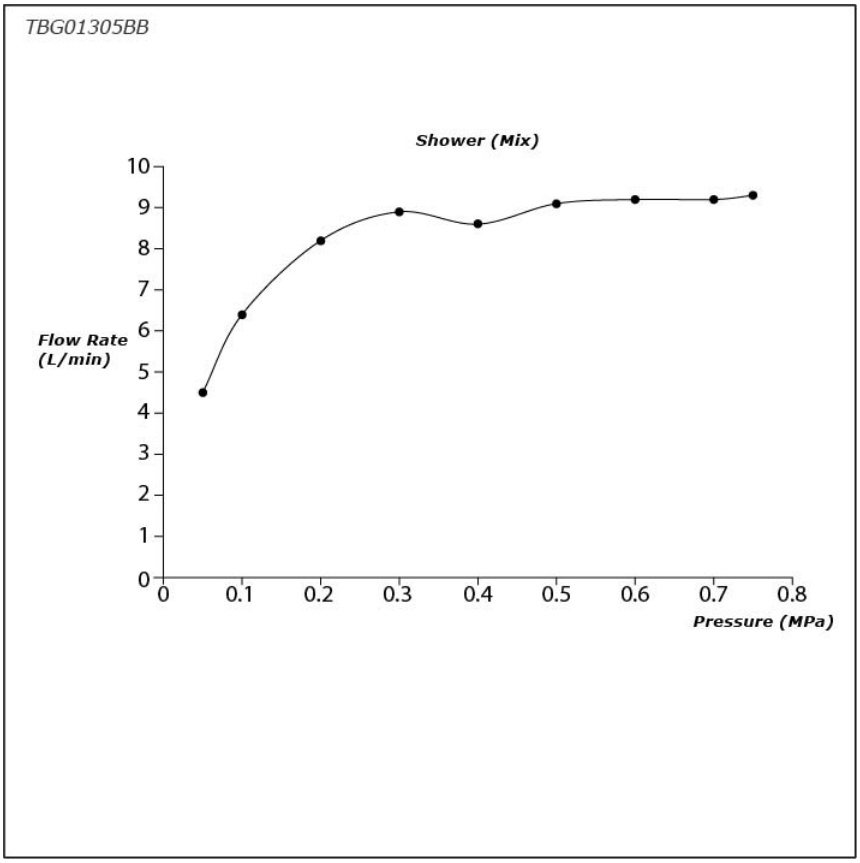

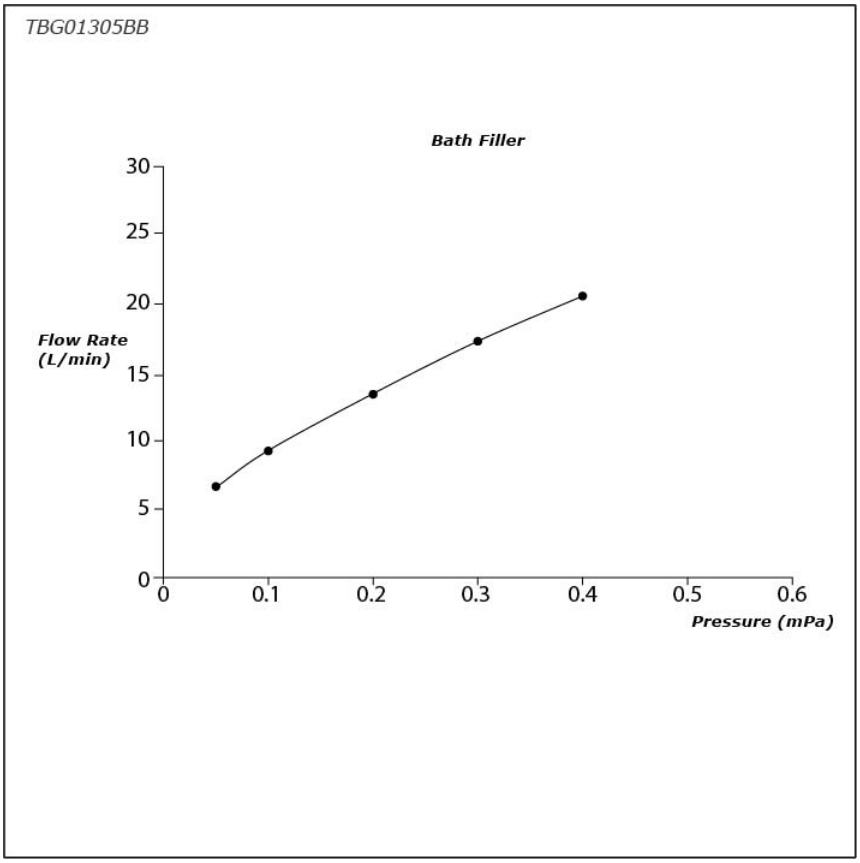

All rights reserved by TOTO company. Specifications and sizes are subject to change without notice.