TOTO

FAUCETS

DB242C

CI CONTEMPORARY
4 Holes Bath and Shower Set

Features

- The Contemporary collections encapsulate beauty and versatility in one harmonious form. They are perfectly suitable for private homes, as well as commercial spaces.

Specifications

Finish:	Chrome
Material:	Brass
Water Pressure:	0.05MPa~0.75MPa

Parts description

- **DB242C**
  4 Holes Bath and Shower Set

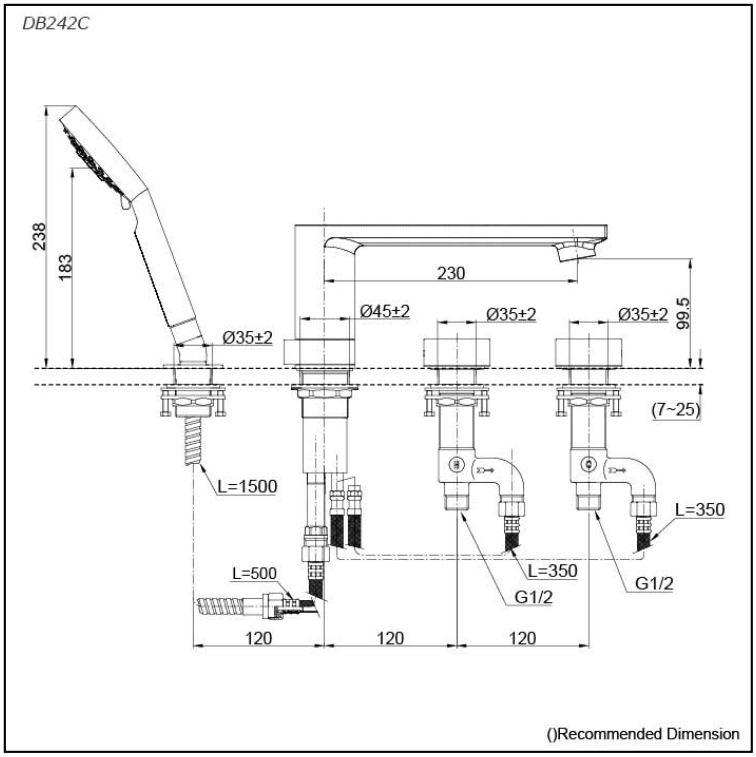

Please consult a TOTO representative for more details

All rights reserved by TOTO company. Specifications and sizes are subject to change without notice.