TOTO

BIDETS

BW563E

RP Series
Wall Faced
Bidet

Features

- Combines comfort and functionality, offering a convenient solution for personal hygiene. Its stylish design enhances any bathroom decor while providing a refreshing and hygienic experience.

Specifications

Size: 380W x 640D x 410H mm

Parts description

- **BW563E**
  Wall Faced Bidet

Optional Parts

- THX1A-5N
  P-Trap for Bidet

reddot winner 2025

DESIGN AWARD 2025

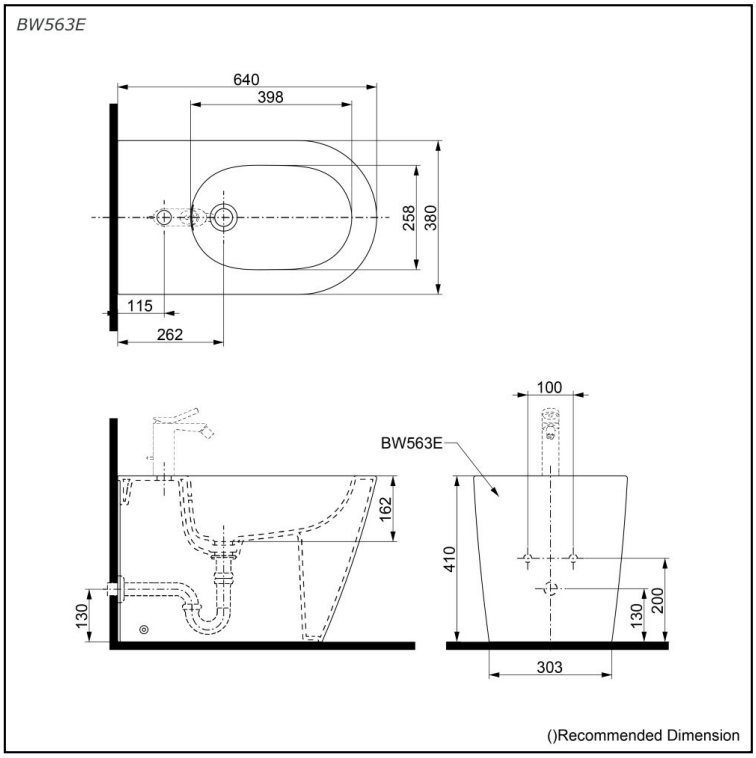

Please consult a TOTO representative for more details

All rights reserved by TOTO company. Specifications and sizes are subject to change without notice.