TOTO

FAUCETS

TLG01304B

GO Series
Single Lever Lavatory Faucet
(Semi-tall Vessel) (w/ Pop-up Waste)

Features

- Infuse your space with a soft, natural ambiance. This faucet series, featuring sunlight-inspired curves, brings sculptural elegance. The round faucet body, blended with nature-like curves, enhances form and function.
- Long-lasting Comfort: COMFORT GLIDE for Smooth Operation with TOTO's Original Cartridge.

Specifications

Finish:	Chrome
Material:	Brass
Water Pressure:	0.05MPa~1.0MPa

Parts description

- **TLG01304B**
  Single Lever Lavatory Faucet (Semi-tall Vessel) (w/ Pop-up Waste)

reddot award 2017
best of the best

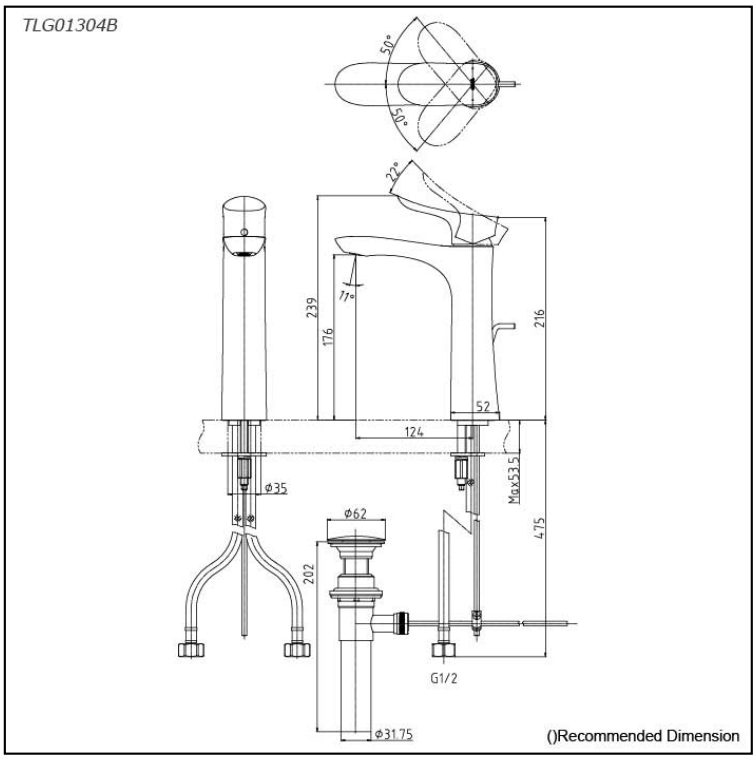

Please consult a TOTO representative for more details

All rights reserved by TOTO company. Specifications and sizes are subject to change without notice.