FAUCETS

TLG02307B

GR Series
Single Lever Lavatory Faucet
(Tall Vessel) (w/ Pop-up Waste)

Features

- Make a regal statement in your space. This premium faucet series, blending sharp edges and gentle curves, offers striking sculptural beauty. Its strong lines, designed to create stability and make a statement, exude a regal presence.
- Long-lasting Comfort: COMFORT GLIDE for Smooth Operation with TOTO's Original Cartridge.

Specifications

Material:	Brass
Water Pressure:	0.05MPa~1.0MPa

Parts description

- **TLG02307B**
  Single Lever Lavatory Faucet (Tall Vessel) (w/ Pop-up Waste)

reddot award 2017 winner

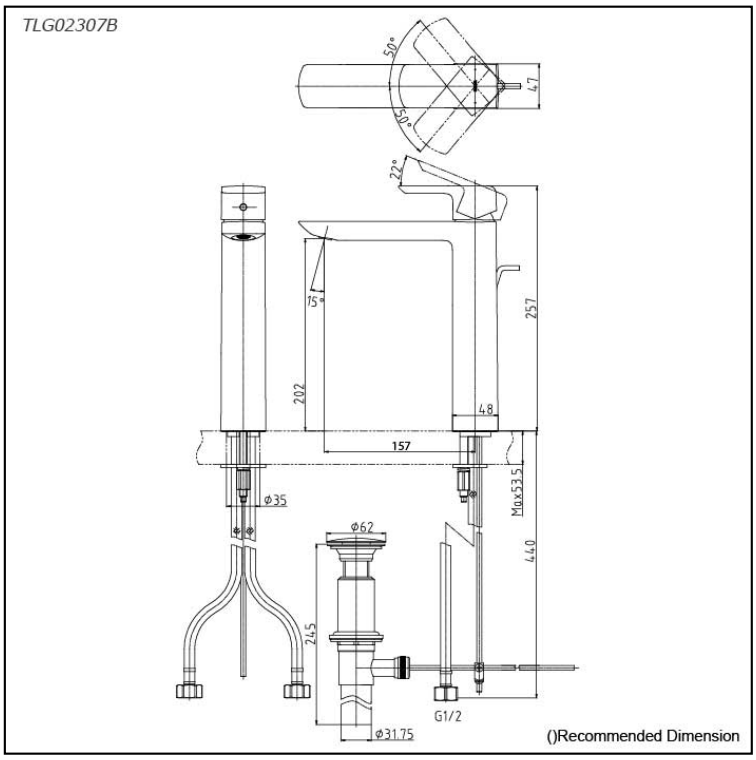

Please consult a TOTO representative for more details

All rights reserved by TOTO company. Specifications and sizes are subject to change without notice.

FAUCETS

Flow Rate

TLG02307B

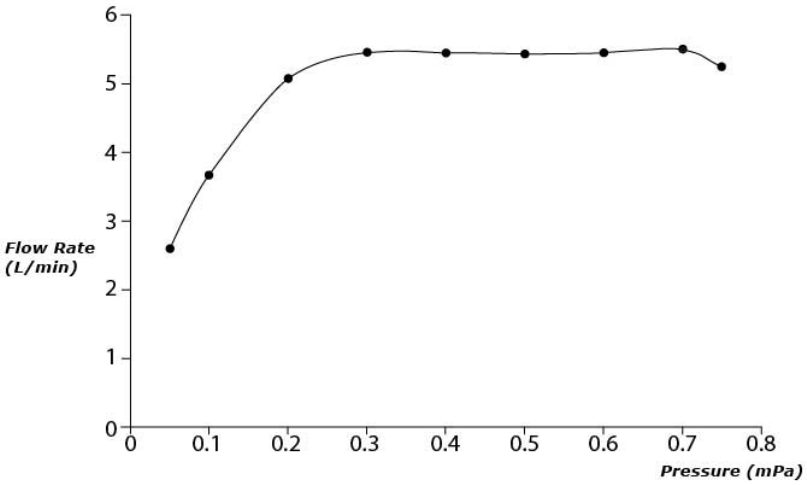

Please consult a TOTO representative for more details

All rights reserved by TOTO company. Specifications and sizes are subject to change without notice.