TOTO

FAUCETS

TBP02302BA / TBN01001B

ZL Series
Single Lever Shower Mixer with Diverter

Features

- Ultra-thin edges and a luminous, mirror surface create a delicate contrast, showcasing advanced design. Engineered to complement sharp-edged basins, these faucets bring a modern, sophisticated edge to your bathroom.
- Mini Unit: Effortless Installation, Maximum Convenience
- Long-lasting Comfort: COMFORT GLIDE for Smooth Operation with TOTO's Original Cartridge.

Specifications

Material:	Brass
Water Pressure:	0.05MPa~1.0MPa

Parts description

- **TBP02302BA**
  Single Lever Shower Mixer with Diverter
- **TBN01001B**
  Concealed Box

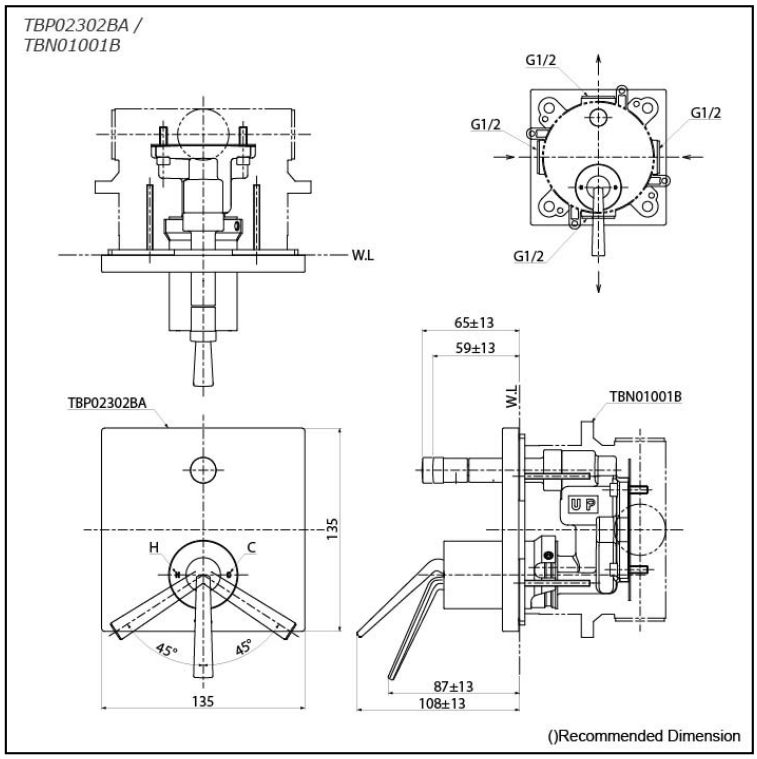

Please consult a TOTO representative for more details

All rights reserved by TOTO company. Specifications and sizes are subject to change without notice.