TOTO

FAUCETS

TBP02201B

ZL Series
Bath Filler without Shower
(3-Holes)

Features

- Ultra-thin edges and a luminous, mirror surface create a delicate contrast, showcasing advanced design. Engineered to complement sharp-edged basins, these faucets bring a modern, sophisticated edge to your bathroom.

Specifications

Material:	Brass
Water Pressure:	0.05MPa~1.0MPa

Parts description

- **TBP02201B**
  Bath filler without shower (3-Holes)

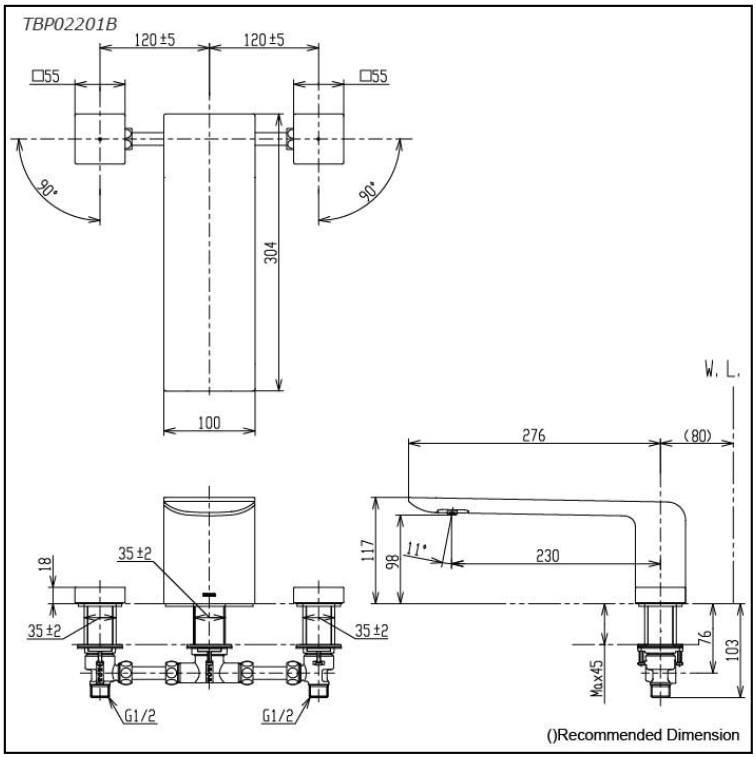

Please consult a TOTO representative for more details

All rights reserved by TOTO company. Specifications and sizes are subject to change without notice.

FAUCETS

Flow Rate

TBP02201B

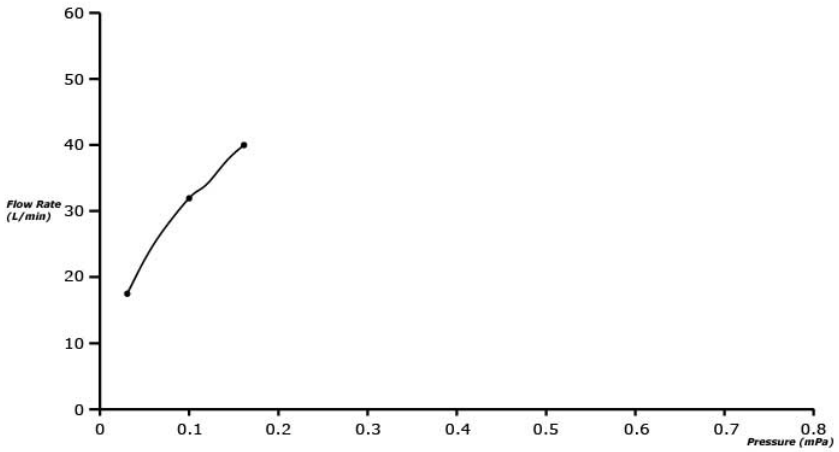

All rights reserved by TOTO company. Specifications and sizes are subject to change without notice.