TOTO

LAVATORIES

LW273CJW/F

Alisei
Wall Hung Lavatory

Features

- Embrace modern elegance with this wall hung option. Its space-saving design creates an open feel while delivering practicality and style, making it an ideal choice for contemporary bathrooms.

Specifications

Size:	420W x 420D x 170H mm
Material:	Ceramic

Parts description

Faucet not included

- **LW273CJ**
  Wall Hung Lavatory
- **TX801LN**
  Wall Mounting Bolt

Colors

White

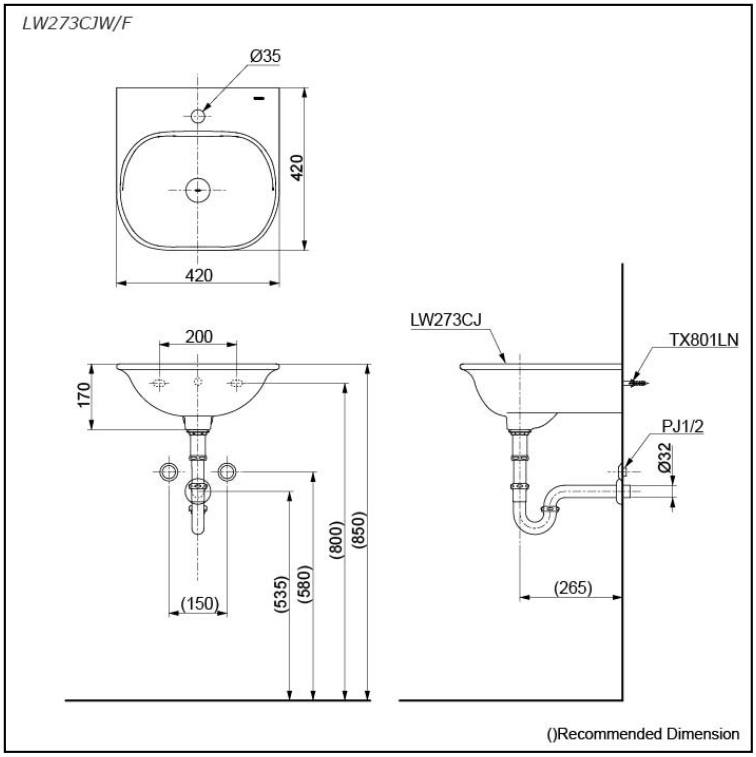

Please consult a TOTO representative for more details

All rights reserved by TOTO company. Specifications and sizes are subject to change without notice.