LAVATORIES

L1716

Console Lavatory

Features

- Experience the perfect combination of style and function. With a spacious basin and sleek design, this option offers durability and everyday convenience, making it an elegant and practical choice for any bathroom.
- Introducing CEFIONTECT Technology: where super smooth surfaces and ion barrier glazing redefine cleanliness for every bathroom fixture.

Specifications

Size:	600W x 385D x 65H mm
Material:	Ceramic

Parts description

Faucet not included

- **L1716**
  Console Lavatory
  w/ Brackets

Colors

White (CEFIONTECT)

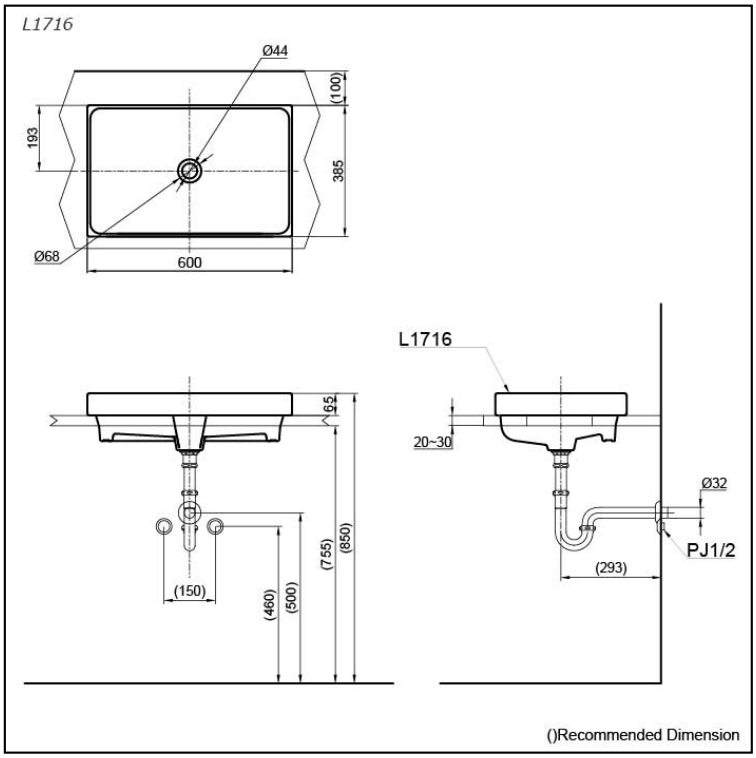

Please consult a TOTO representative for more details

All rights reserved by TOTO company. Specifications and sizes are subject to change without notice.