TOTO

FAUCETS

TLG04308L

GA Series
Single Lever Lavatory Faucet
(Tall Vessel) (w/o pop-up waste)

Features

- Refined elegance, versatile design. Experience the perfect balance of curves and edges in this faucet series. Simple yet sophisticated, its design complements a wide range of interiors, bringing a unique ambiance to any space.
- Long-lasting Comfort: COMFORT GLIDE for Smooth Operation with TOTO's Original Cartridge.

Specifications

Finish:	Chrome
Material:	Brass
Water Pressure:	0.05 ~ 1.0 Mpa

Parts description

- **TLG04308L**
  Single Lever Lavatory Faucet (Tall Vessel) (w/o Pop-up Waste)

Certifications

WaterMark

reddot award 2018 winner

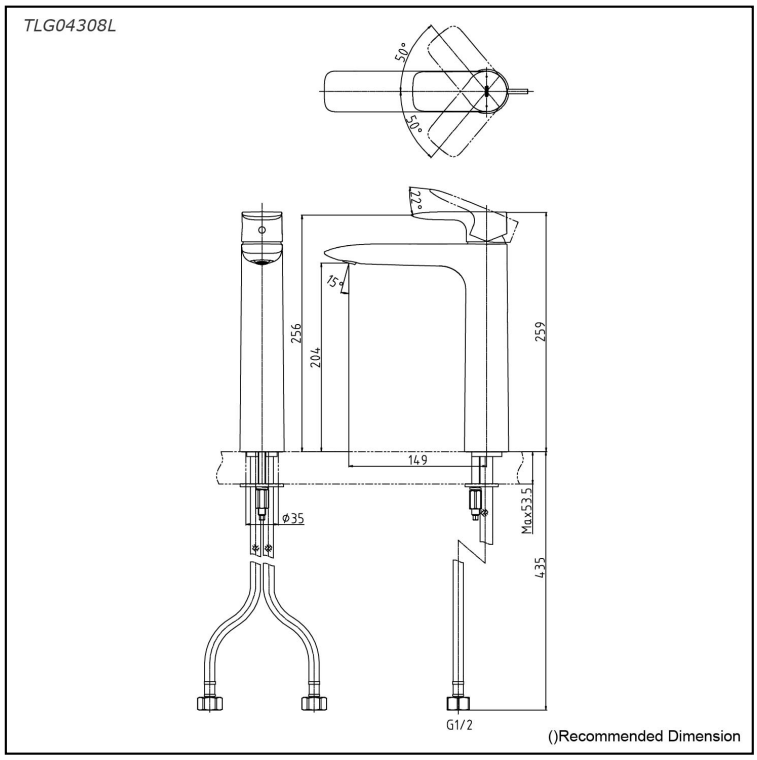

Please consult a TOTO representative for more details

All rights reserved by TOTO company. Specifications and sizes are subject to change without notice.