TOTO

FAUCETS

TBG11306L / TBN01105S

GF Series
Floor Standing Bath & Shower Set

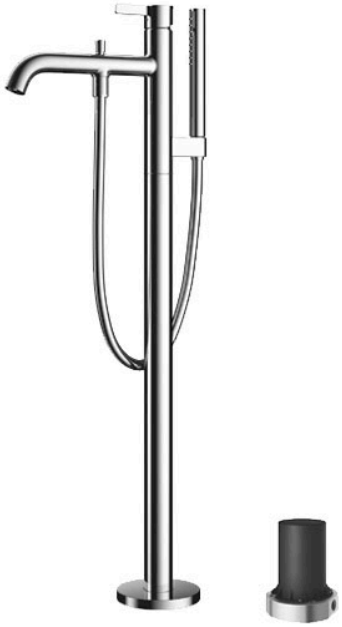

Features

- Versatile elegance, crafted with precision. Modern classic collection balances minimalist design with fine, rounded details, creating unique personality. Long handle emphasizes slimness and stability, making it seamless to any aesthetic.
- Elevate your shower with COMFORT WAVE technology: enjoy larger droplets in a hand shower design, blending stimulation, relaxation, and water-saving benefits.
- Long-lasting Comfort: COMFORT GLIDE for Smooth Operation with TOTO's Original Cartridge.

Specifications

Finish:	Chrome
Material:	Brass
Water Pressure:	0.05MPa~1.0MPa

Parts description

- **TBG11306L**
  Floor-standing Bath & Shower Set
- **TBN01105S**
  Floor-standing Bath Filler Base

Certifications

WaterMark

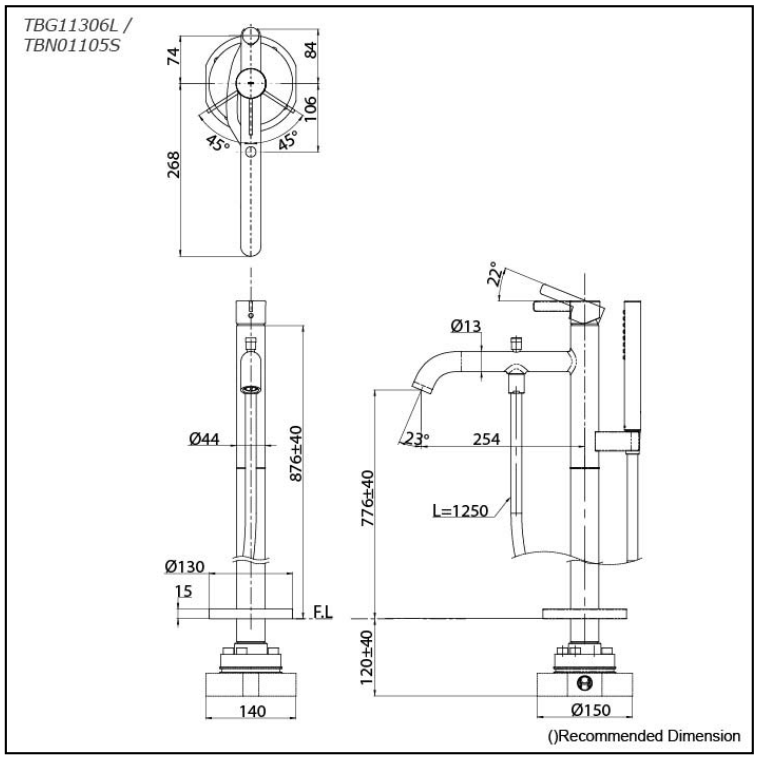

Please consult a TOTO representative for more details

All rights reserved by TOTO company. Specifications and sizes are subject to change without notice.