TOTO

FAUCETS

TBG08306L / TBN01105S

GC Series
Floor Standing Bath & Shower Set

Features

- Discover enduring beauty in crafted modern classic faucets. Inspired by architecture and the Bonsho bell's curves, designs blend stability with modern flair. Formal elements evoke timelessness.
- Elevate your shower with COMFORT WAVE technology: enjoy larger droplets in a hand shower design, blending stimulation, relaxation, and water-saving benefits.
- Long-lasting Comfort: COMFORT GLIDE for Smooth Operation with TOTO's Original Cartridge.

Specifications

Finish:	Chrome
Material:	Brass
Water Pressure:	0.05MPa~1.0MPa

Parts description

- **TBG08306L**
  Floor-standing Bath & Shower Set
- **TBN01105S**
  Floor-standing Bath Filler Base

Certifications

WaterMark

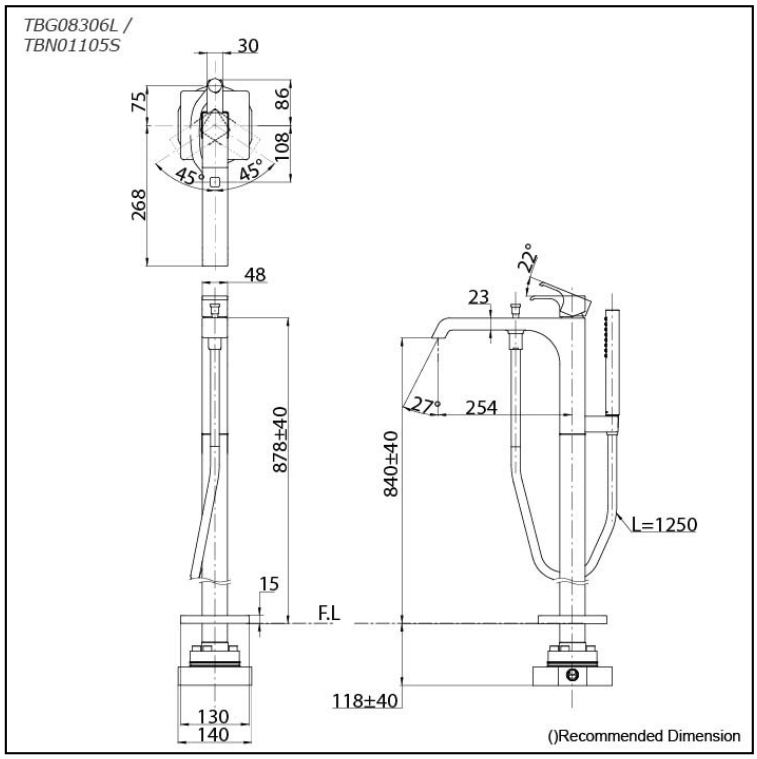

Please consult a TOTO representative for more details

All rights reserved by TOTO company. Specifications and sizes are subject to change without notice.