TOTO

FAUCETS

TX119LKBR-5L

COCKTAIL
2 Handle Lavatory Faucet
(3-Holes)(w/ pop-up waste)

Features

- The Cocktail series proves that simplicity is the ultimate sophistication. Its ergonomic design and minimalist surface speak of understated luxury.

Specifications

Finish:	Nickel Chrome
Hole:	3 holes
Water Pressure:	0.05MPa~0.75MPa

Parts description

- **TX119LKBR-5L**
  2 Handle Lavatory Faucet w/ pop-up waste

Certifications

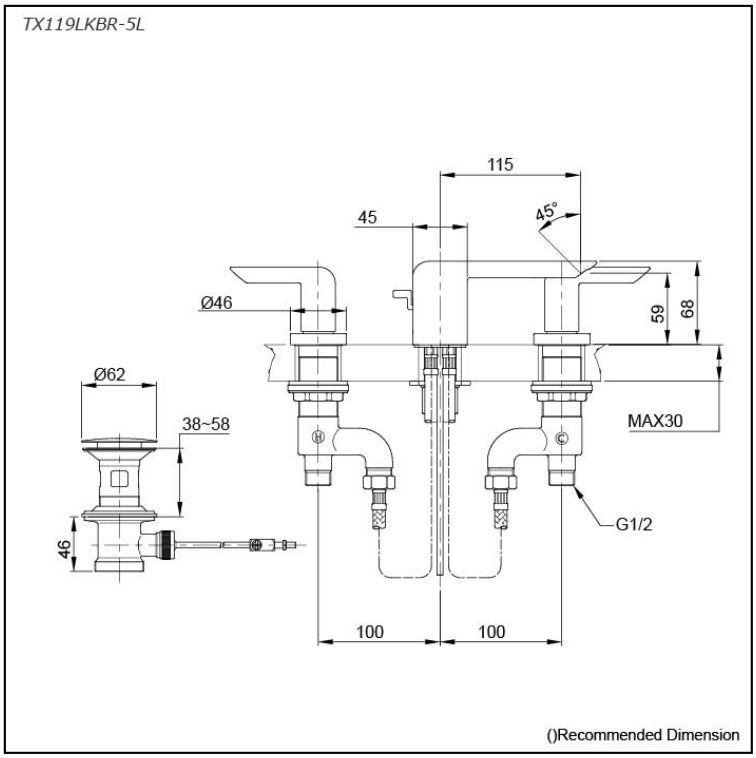

Please consult a TOTO representative for more details

All rights reserved by TOTO company. Specifications and sizes are subject to change without notice.