TOTO

FAUCETS

TLS03308DA

LC Series
Wall-Mount Single Lever Lavatory Faucet
(Long Spout) (w/o Pop-up Waste)

Features

- Experience the beauty of flowing curves, where a lovingly designed handle enhances both aesthetics and comfort for enduring use.
- High corrosion resistance plating.
- TOTO original cartridge for smooth control

Specifications

Finish:	Chrome
Material:	Brass
Water Pressure:	0.05MPa~1.0MPa

Parts description

- **TLS03308DA**
  Wall-Mount Single Lever Lavatory Faucet (Long Spout) w/o waste fitting

Certifications

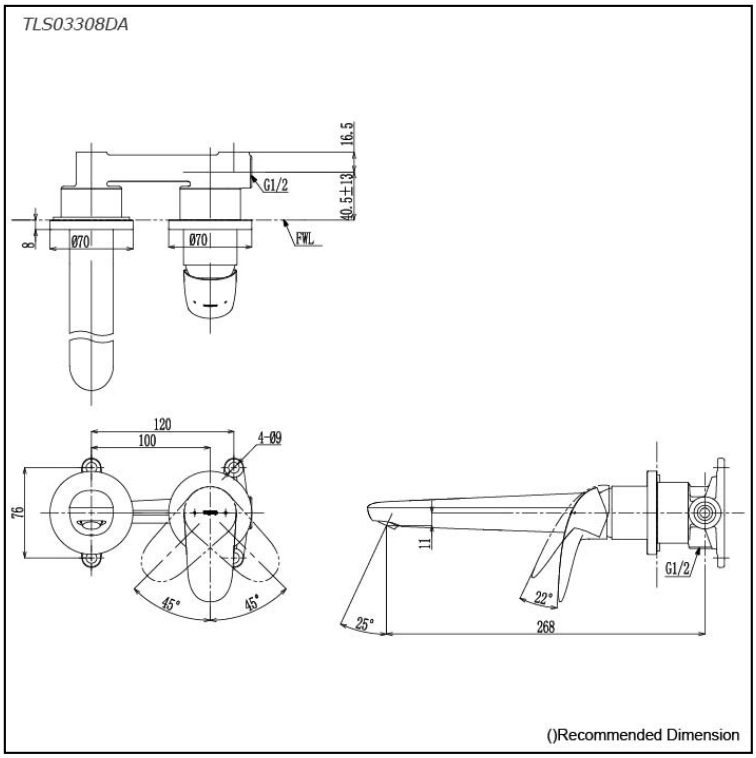

Please consult a TOTO representative for more details

All rights reserved by TOTO company. Specifications and sizes are subject to change without notice.