TOTO | *TOUCHLESS FAUCET*

TLE24001D

Touchless Faucet
Deck Mounted

Features

- The touchless faucet offers hygienic, hands-free operation with advanced sensors for on-demand water delivery. Ideal for modern bathrooms and public spaces, it promotes cleanliness and water efficiency.
- Experience ultimate convenience with our Automatic Operation, offering effortless performance and streamlined functionality.
- Soft Flow Faucets: Gentle, Touchless Sensor Technology, Lustrous Water.

Specifications

Flow Rate:	1.3L/min
Water Pressure:	0.05MPa ~ 0.75MPa
Finish:	Nickel Chrome

Parts description

Single Supply Combination

- **AC Controller**
  1. TLE24001D (Deck-mounted)
  2. TLE01501H (AC Operated - BF Plug)
  3. *TLN01102A (Stop Valve Set)**
- **Self Powered Controller**
  1. TLE24001D (Deck-mounted)
  2. TLE03501H (Self Powered)
  3. *TLN01102A (Stop Valve Set)**
- **Battery Operated Controller**
  1. TLE24001D (Deck-mounted)
  2. TLE04501H (Battery Operated)
  3. *TLN01102A (Stop Valve Set)**

NOTE

- **For Thermostatic*
  Please purchase TLE05701A (Thermostat) and TLN01103A (Stop Valve Set) instead

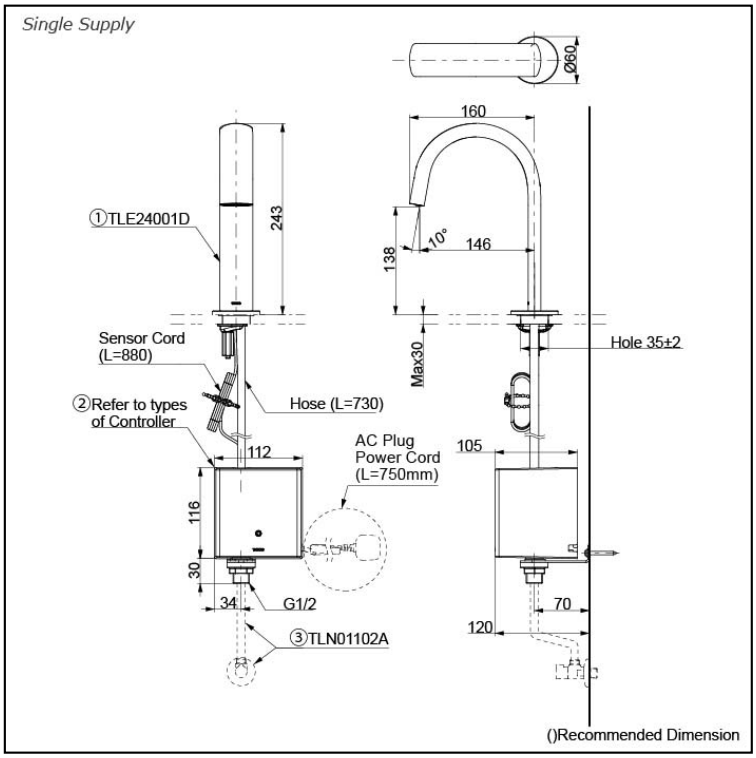

Certifications

EPD
INTERNATIONAL EPD SYSTEM

Please consult a TOTO representative for more details

All rights reserved by TOTO company. Specifications and sizes are subject to change without notice.

TOUCHLESS FAUCET

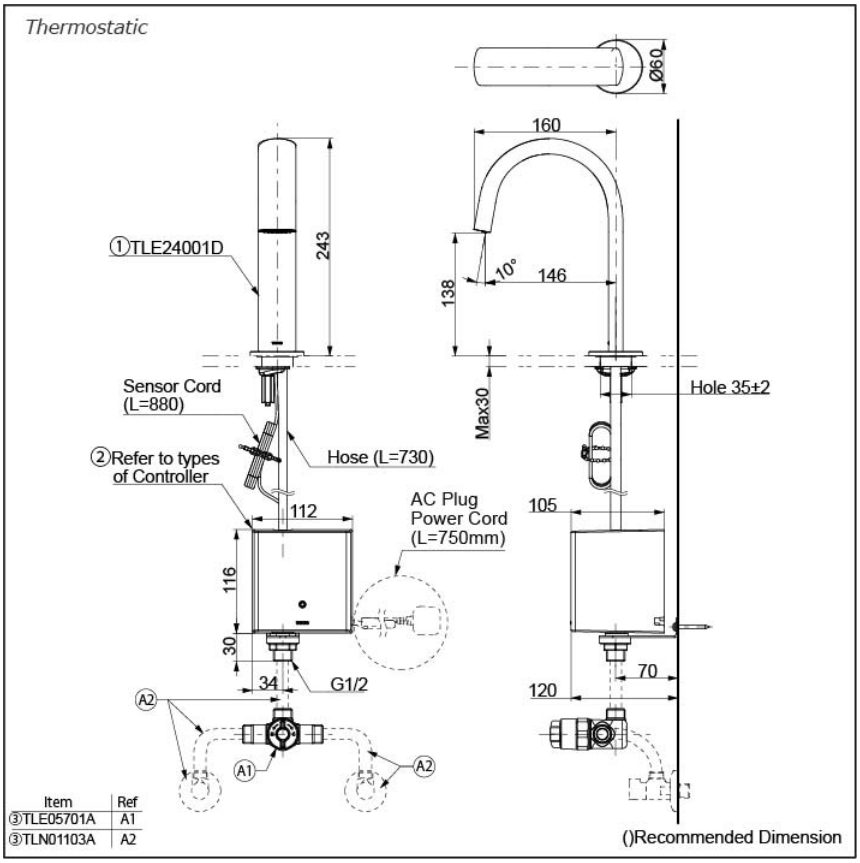

All rights reserved by TOTO company. Specifications and sizes are subject to change without notice.